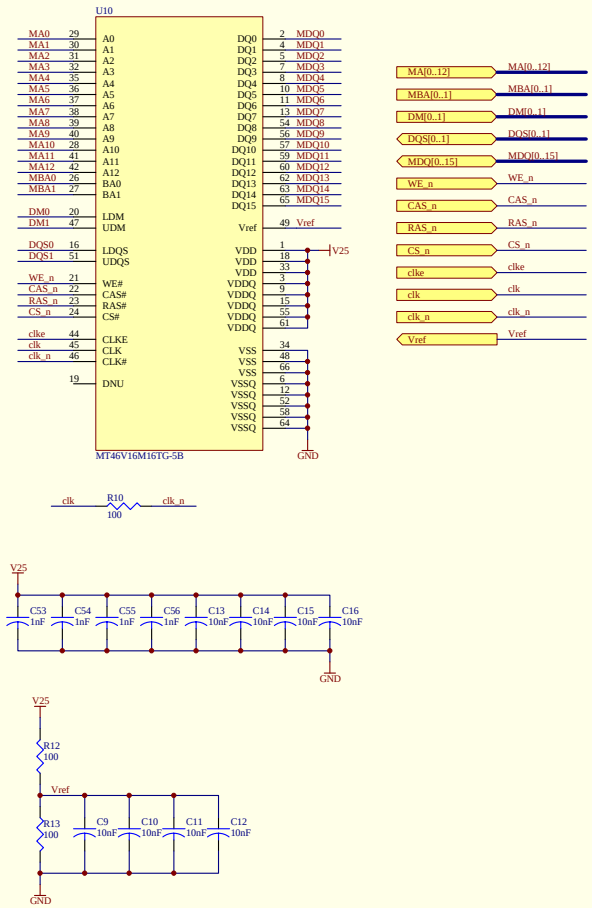

Title	EDF Physics Dept. Boston University		
Size A3	Number ddrram.Sch		Revision
Date: 21-Nov-2008		Sheet 12 of 16	
File: C:\projects\dcc_vme\dcc_vme.ddb		Drawn By: Shouxiang Wu	