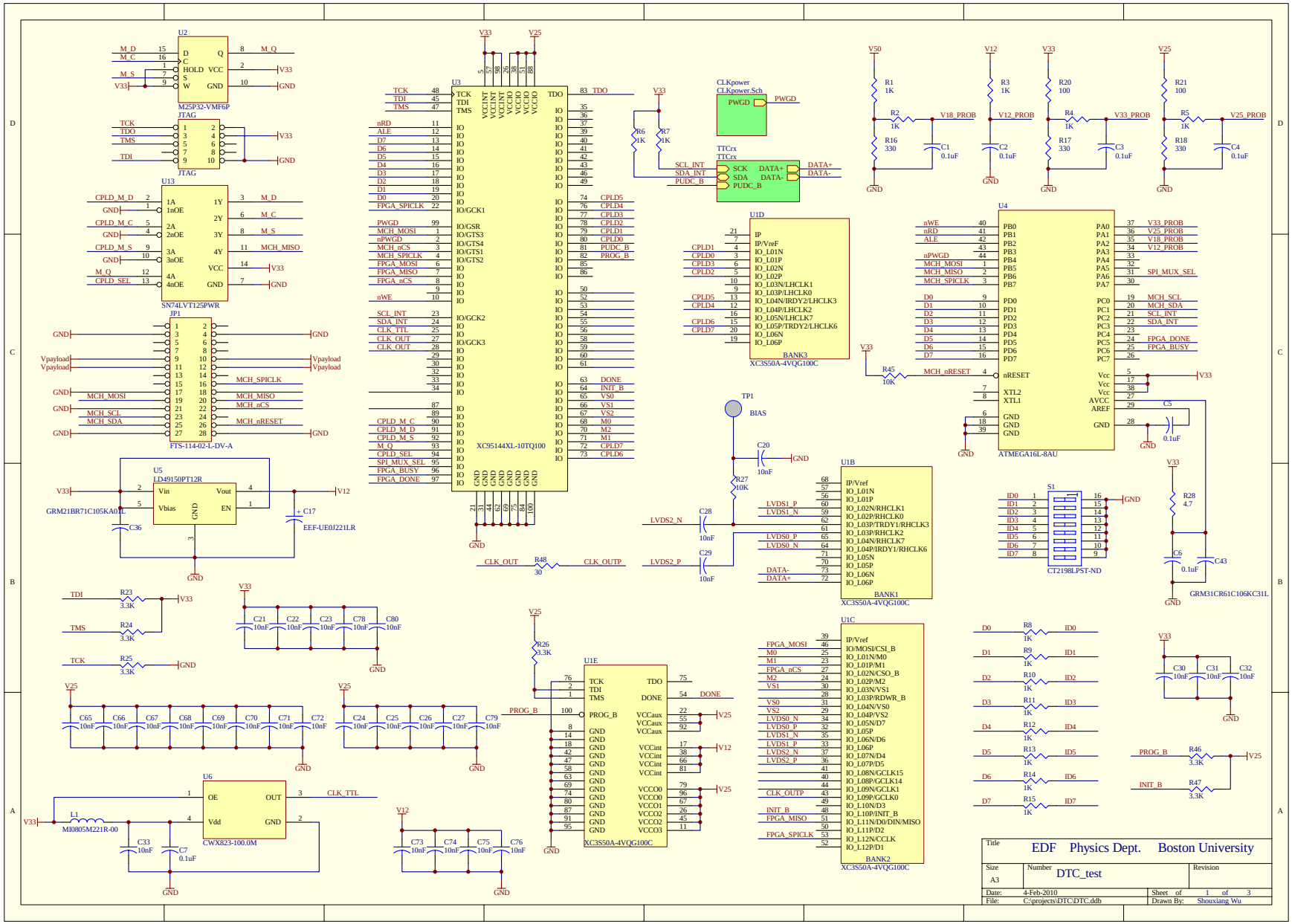
U2
M25P32-VMF6P
JTAG
U13
SN74LVT125PWR
JP1
FTS-114-02-L-DV-A
U5
LD49150PT12R
GRM21BR71C105KA01L
EEF-UE0J221LR
U3
XC95144XL-10TQ100
U6
CWX823-100.0M
MI0805M221R-00
CLKpower
CLKpower.Sch
TTCrx
U1D
XC3S50A-4VQG100C
BANK3
U4
ATMEGA16L-8AU
U1B
BANK1
S1
CT2198LPST-ND
GRM31CR61C106KC31L
U1E
U1C
BANK2
EDF Physics Dept. Boston University
Title
Size
A3
Number
DTC_test
Revision
Date: 4-Feb-2010
Sheet of 1 of 3
File: C:\projects\DTC\DTC.ddb
Drawn By: Shouxiang Wu