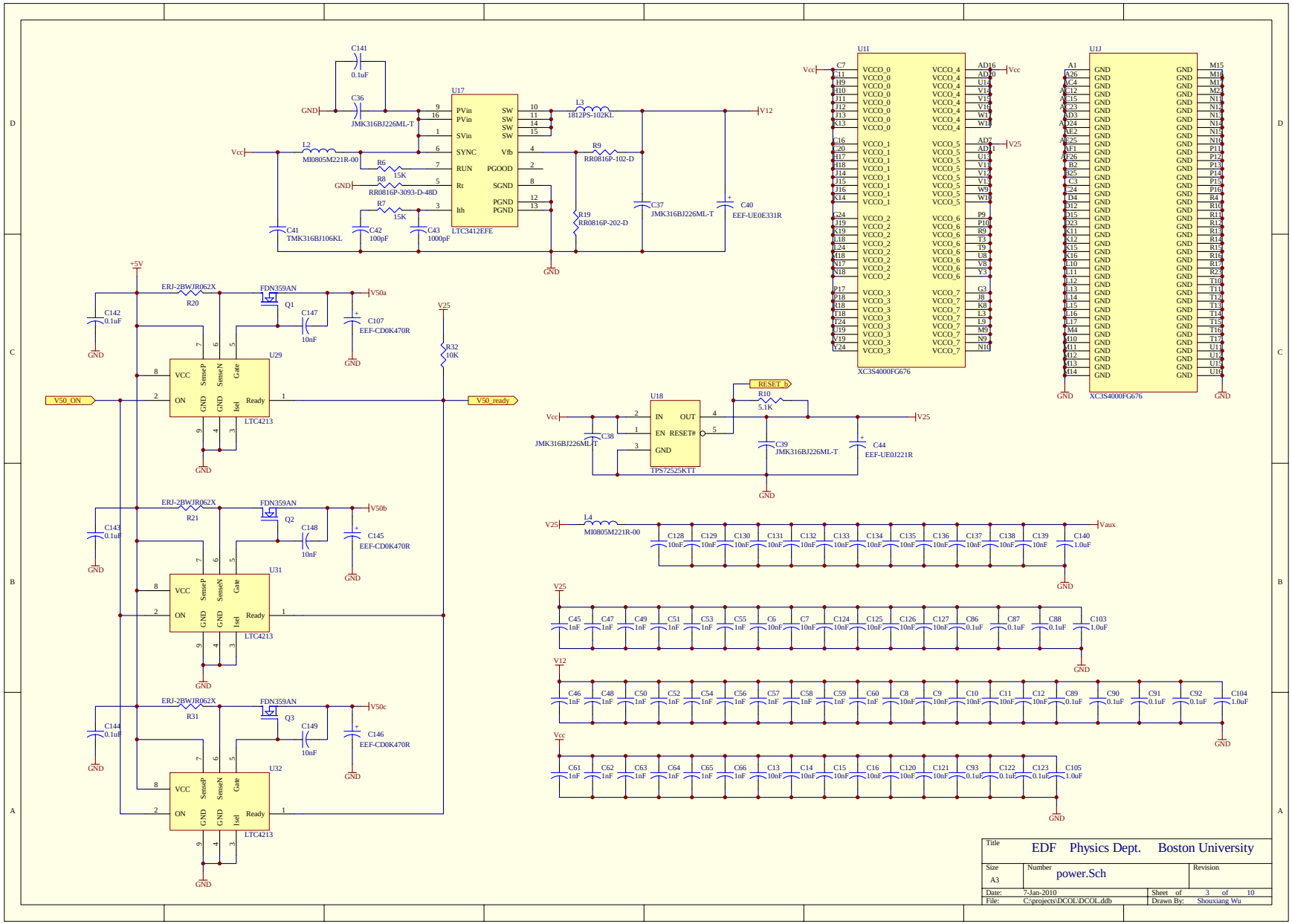


| | | |
|---|---|---|
| Title | EDF Physics Dept. Boston University | |
| Size A3 | Number power.Sch | Revision |
| Date: 7-Jan-2010 | Sheet of 3 of 10 | |
| File: C:\projects\DCOL\DCOL.ddb | Drawn By: Shouxiang Wu | |