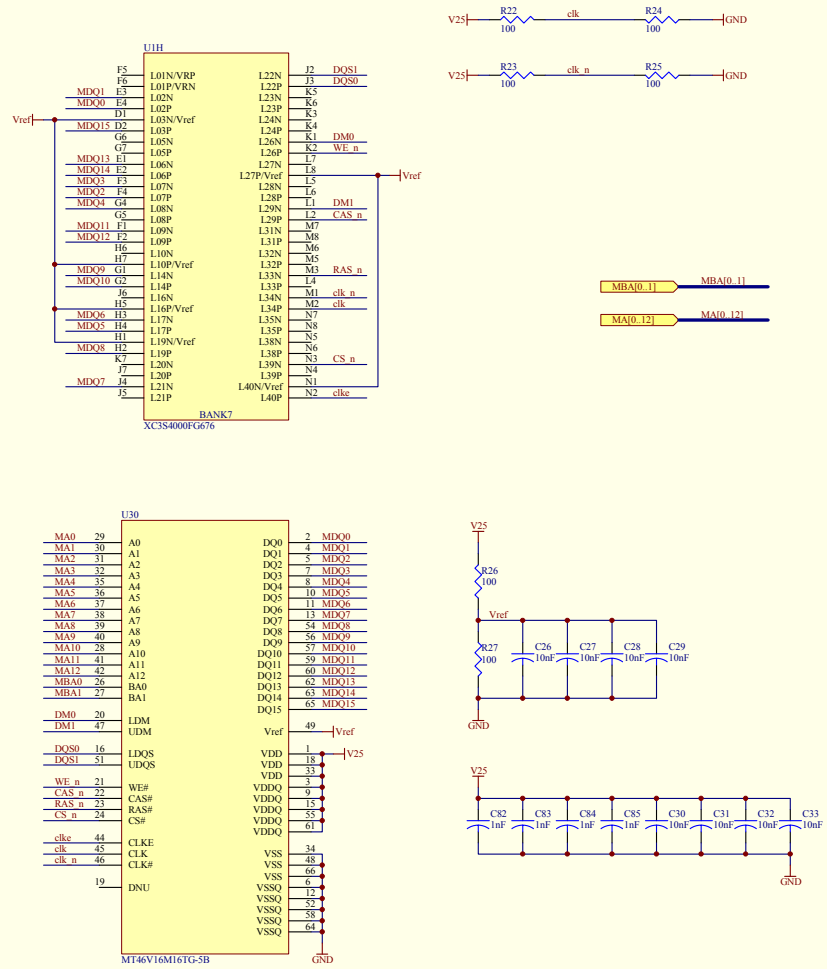

Title	EDF Physics Dept. Boston University		
Size A3	Number ddrram.Sch		Revision
Date: 21-Mar-2007		Sheet of 10 of 10	
File: C:\projects\DCOL\DCOL.ddb		Drawn By: Shouxiang Wu	