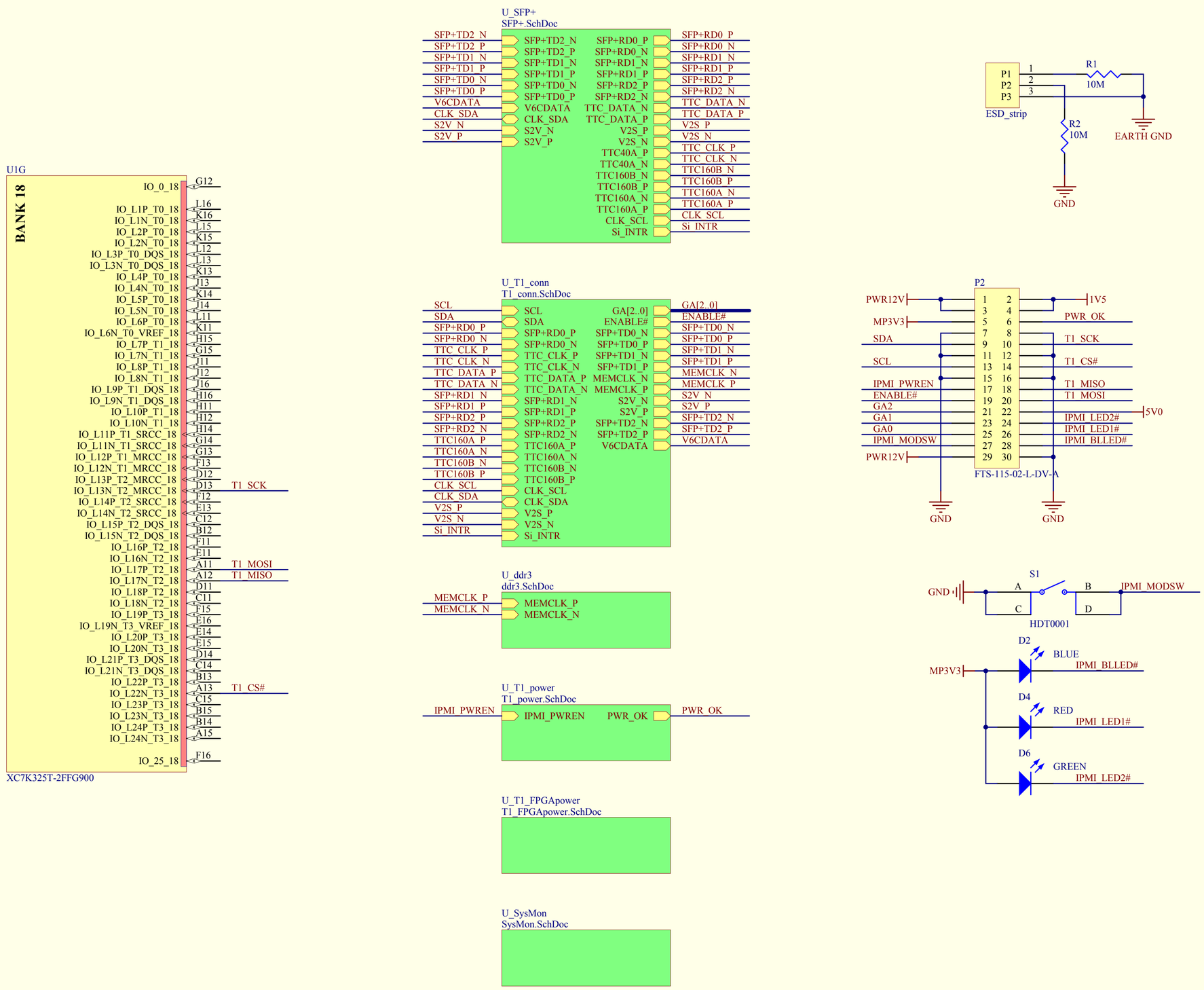

Title *T1*			*EDF Physics Dept*
Size: A3	Number: 1	Revision: 2.1	*Boston University*
Date: 1/6/2013	Time: 4:49:02 PM	Sheet 1 of 7	
File: D:\projects\AMC13\AMC13XG\T1.SchDoc			

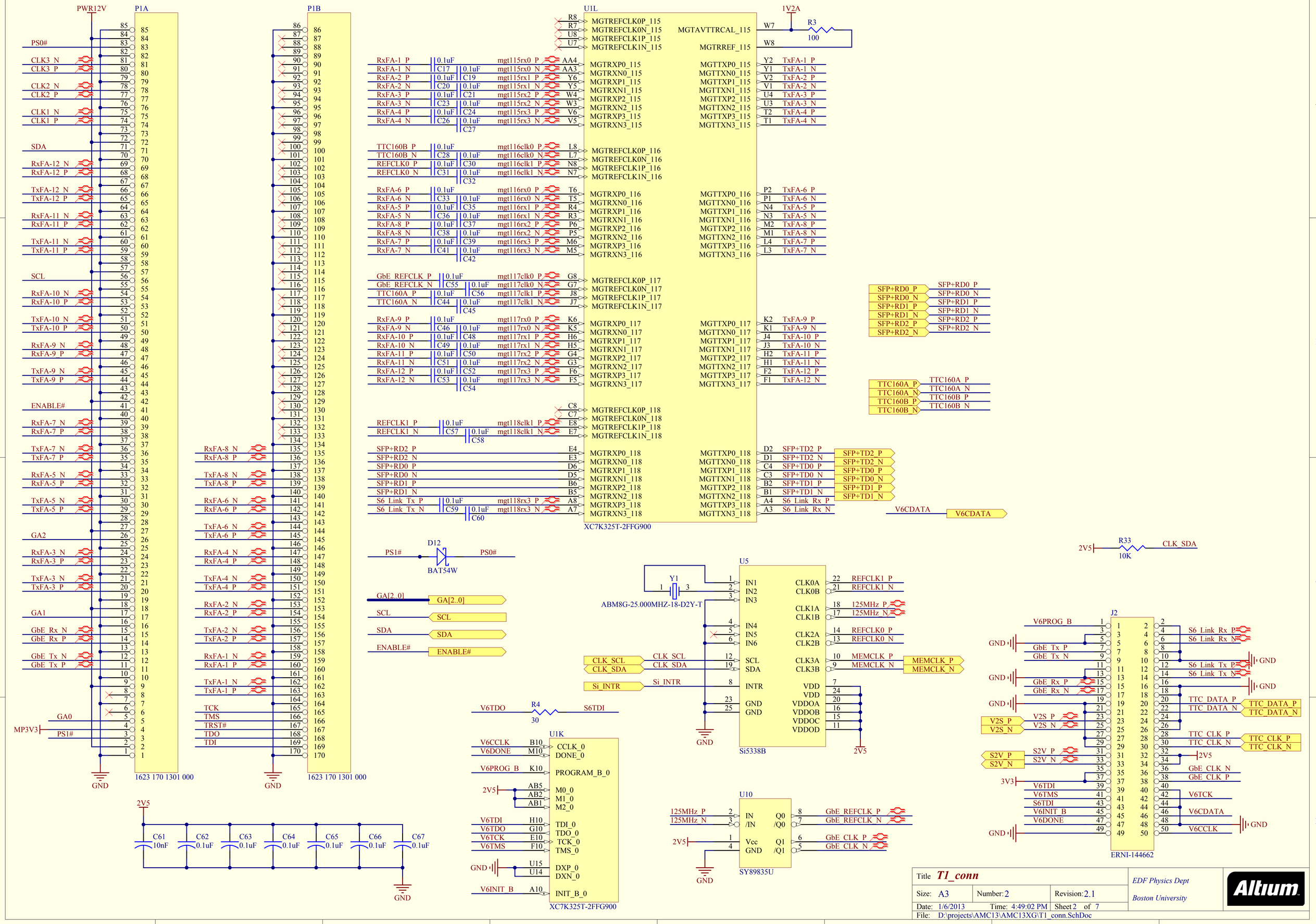
PWR12V
P1A
P1B
U1L
1V2A
R3
100
MGTAVTTRCAL_115
MGTRREF_115
XC7K325T-2FFG900
D12
BAT54W
PS1#
PS0#
GA[2..0]
SCL
SDA
ENABLE#
U5
Y1
ABM8G-25.000MHZ-18-D2Y-T
Si5338B
2V5
R33
10K
CLK_SDA
U1K
V6TDO
R4
30
S6TDI
U10
SY89835U
J2
ERNI-144662
C61
10nF
C62
C63
C64
C65
C66
C67
0.1uF
GND
1623 170 1301 000
MP3V3
GA0
GA1
GA2
V6CDATA
Title T1_conn
Size: A3
Number: 2
Revision: 2.1
Date: 1/6/2013
Time: 4:49:02 PM
Sheet 2 of 7
File: D:\projects\AMC13\AMC13XG\T1_conn.SchDoc
EDF Physics Dept
Boston University
Altium

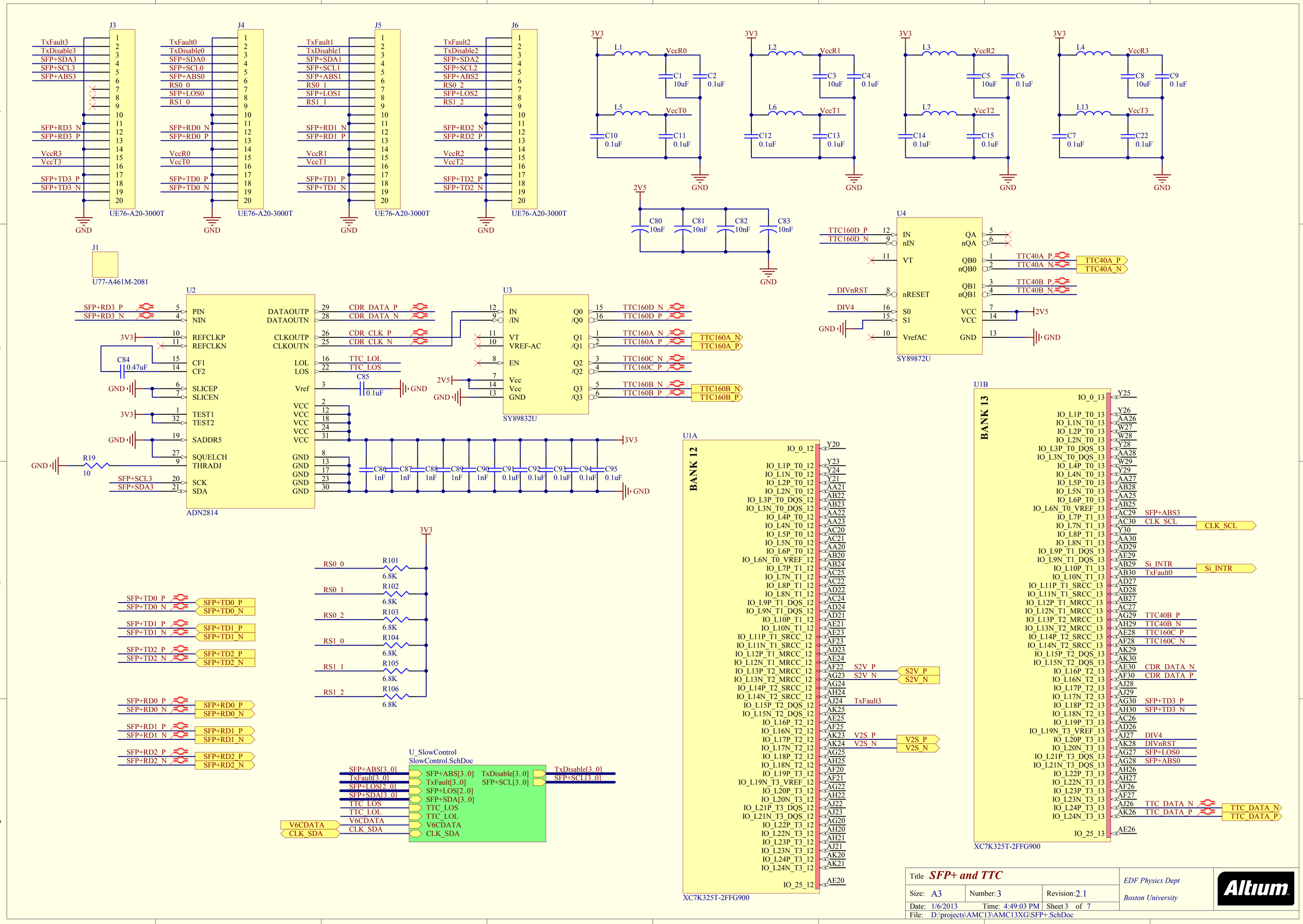
J3
J4
J5
J6
UE76-A20-3000T
TxFault3
TxDisable3
SFP+SDA3
SFP+SCL3
SFP+ABS3
SFP+RD3_N
SFP+RD3_P
VccR3
VccT3
SFP+TD3_P
SFP+TD3_N
TxFault0
TxDisable0
SFP+SDA0
SFP+SCL0
SFP+ABS0
RS0_0
SFP+LOS0
RS1_0
SFP+RD0_N
SFP+RD0_P
VccR0
VccT0
SFP+TD0_P
SFP+TD0_N
TxFault1
TxDisable1
SFP+SDA1
SFP+SCL1
SFP+ABS1
RS0_1
SFP+LOS1
RS1_1
SFP+RD1_N
SFP+RD1_P
VccR1
VccT1
SFP+TD1_P
SFP+TD1_N
TxFault2
TxDisable2
SFP+SDA2
SFP+SCL2
SFP+ABS2
RS0_2
SFP+LOS2
RS1_2
SFP+RD2_N
SFP+RD2_P
VccR2
VccT2
SFP+TD2_P
SFP+TD2_N
GND
3V3
L1
L2
L3
L4
L5
L6
L7
L13
C1 10uF
C2 0.1uF
C3 10uF
C4 0.1uF
C5 10uF
C6 0.1uF
C8 10uF
C9 0.1uF
C10 0.1uF
C11 0.1uF
C12 0.1uF
C13 0.1uF
C14 0.1uF
C15 0.1uF
C7 0.1uF
C22 0.1uF
2V5
C80 10nF
C81 10nF
C82 10nF
C83 10nF
U4
SY89872U
TTC160D_P
TTC160D_N
IN
nIN
VT
nRESET
DIVnRST
DIV4
S0
S1
VrefAC
QA
nQA
QB0
nQB0
QB1
nQB1
VCC
TTC40A_P
TTC40A_N
TTC40B_P
TTC40B_N
J1
U77-A461M-2081
U2
ADN2814
PIN
NIN
REFCLKP
REFCLKN
CF1
CF2
SLICEP
SLICEN
TEST1
TEST2
SADDR5
SQUELCH
THRADJ
SCK
SDA
DATAOUTP
DATAOUTN
CLKOUTP
CLKOUTN
LOL
LOS
Vref
CDR_DATA_P
CDR_DATA_N
CDR_CLK_P
CDR_CLK_N
TTC_LOL
TTC_LOS
C84 0.47uF
C85 0.1uF
R19 10
C86 1nF
C87 1nF
C88 1nF
C89 1nF
C90 1nF
C91 0.1uF
C92 0.1uF
C93 0.1uF
C94 0.1uF
C95 0.1uF
U3
SY89832U
IN
/IN
VT
VREF-AC
EN
Vcc
GND
Q0
/Q0
Q1
/Q1
Q2
/Q2
Q3
/Q3
TTC160A_N
TTC160A_P
TTC160B_N
TTC160B_P
TTC160C_N
TTC160C_P
U1A
BANK 12
XC7K325T-2FFG900
S2V_P
S2V_N
TxFault3
V2S_P
V2S_N
U1B
BANK 13
SFP+ABS3
CLK_SCL
Si_INTR
TxFault0
TTC40B_P
TTC40B_N
TTC160C_P
TTC160C_N
CDR_DATA_N
CDR_DATA_P
SFP+TD3_P
SFP+TD3_N
DIV4
DIVnRST
SFP+LOS0
SFP+ABS0
TTC_DATA_N
TTC_DATA_P
RS0_0
RS0_1
RS0_2
RS1_0
RS1_1
RS1_2
R101
R102
R103
R104
R105
R106
6.8K
SFP+TD0_P
SFP+TD0_N
SFP+TD1_P
SFP+TD1_N
SFP+TD2_P
SFP+TD2_N
SFP+RD0_P
SFP+RD0_N
SFP+RD1_P
SFP+RD1_N
SFP+RD2_P
SFP+RD2_N
U_SlowControl
SlowControl.SchDoc
SFP+ABS[3..0]
TxFault[3..0]
SFP+LOS[2..0]
SFP+SDA[3..0]
TTC_LOS
TTC_LOL
V6CDATA
CLK_SDA
TxDisable[3..0]
SFP+SCL[3..0]
Title SFP+ and TTC
Size: A3
Number: 3
Revision: 2.1
Date: 1/6/2013
Time: 4:49:03 PM
Sheet 3 of 7
File: D:\projects\AMC13\AMC13XG\SFP+.SchDoc
EDF Physics Dept
Boston University
Altium

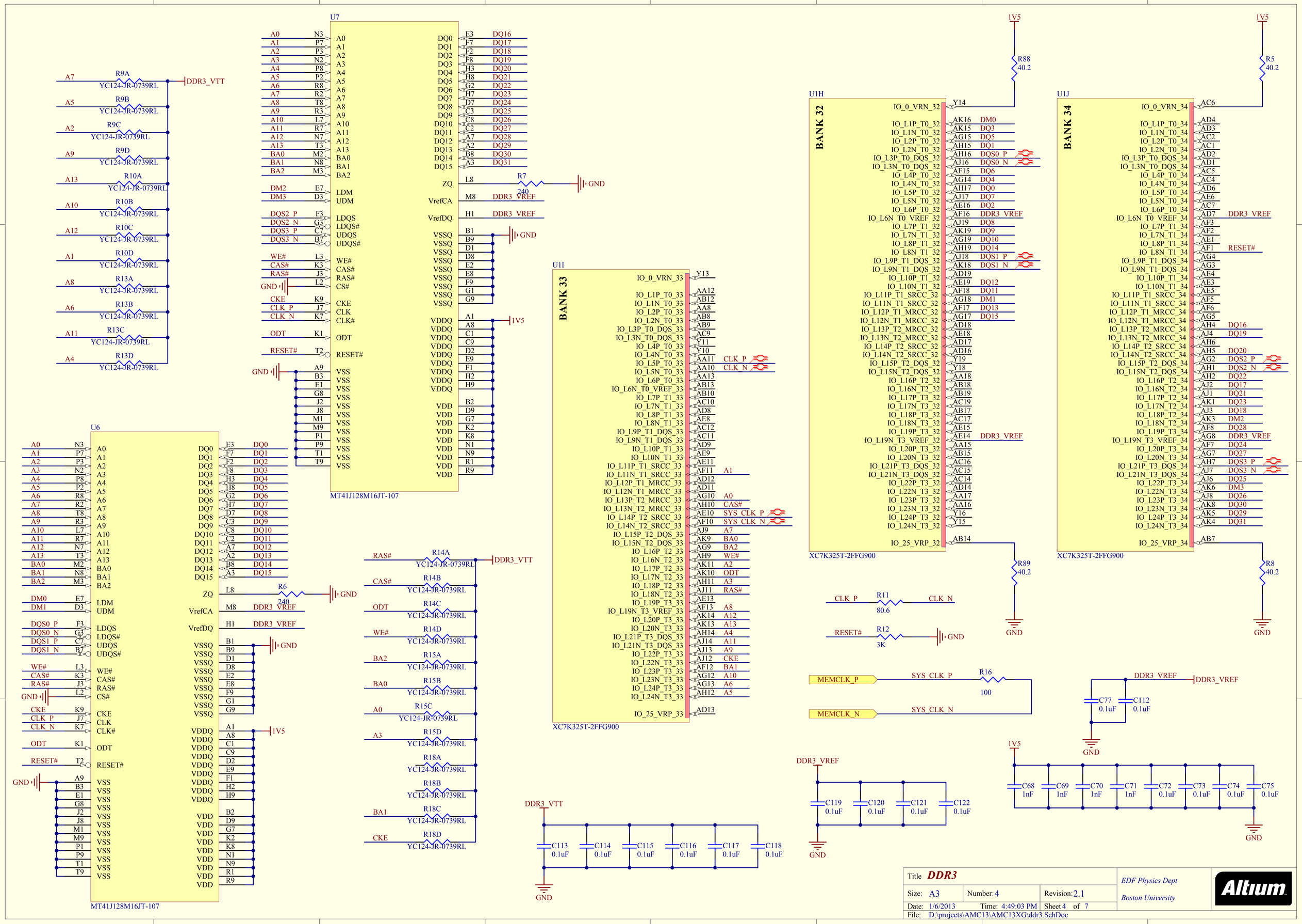

Title	DDR3		EDF Physics Dept
Size: A3	Number: 4	Revision: 2.1	Boston University
Date: 1/6/2013	Time: 4:49:03 PM	Sheet 4 of 7	
File: D:\projects\AMC13\AMC13XG\ddr3.SchDoc			

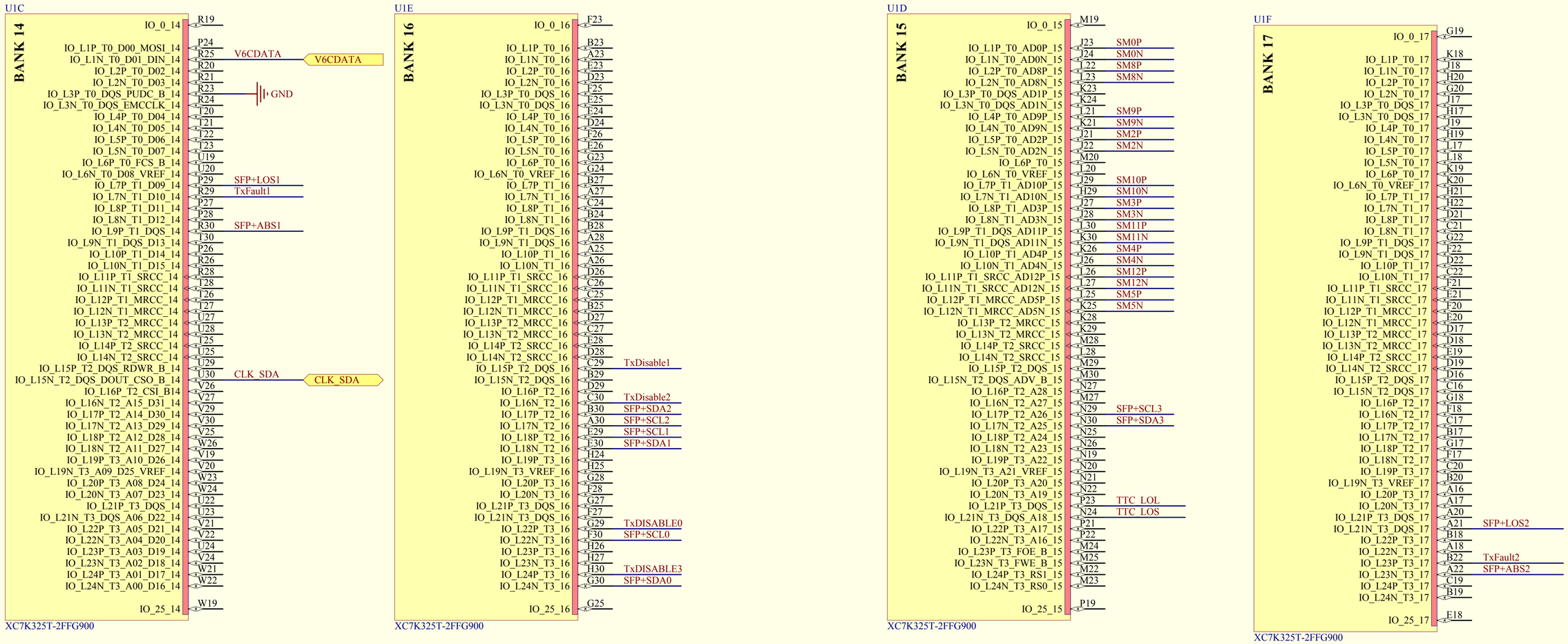

Title *Slow Control*			*EDF Physics Dept*
Size: A3	Number: 5	Revision: 2.1	*Boston University*
Date: 1/6/2013	Time: 4:49:03 PM	Sheet 5 of 7	
File: D:\projects\AMC13\AMC13XG\SlowControl.SchDoc			

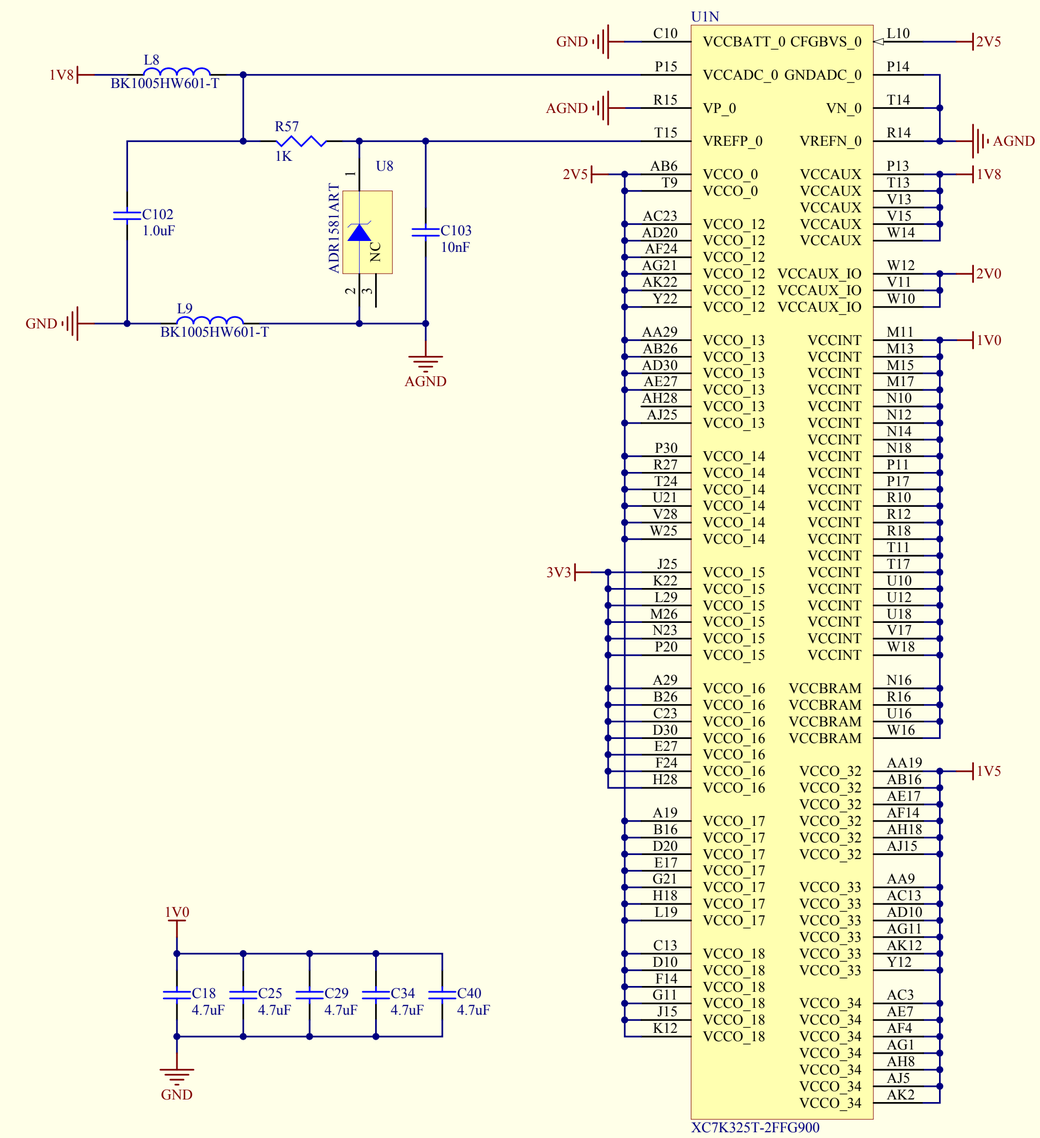

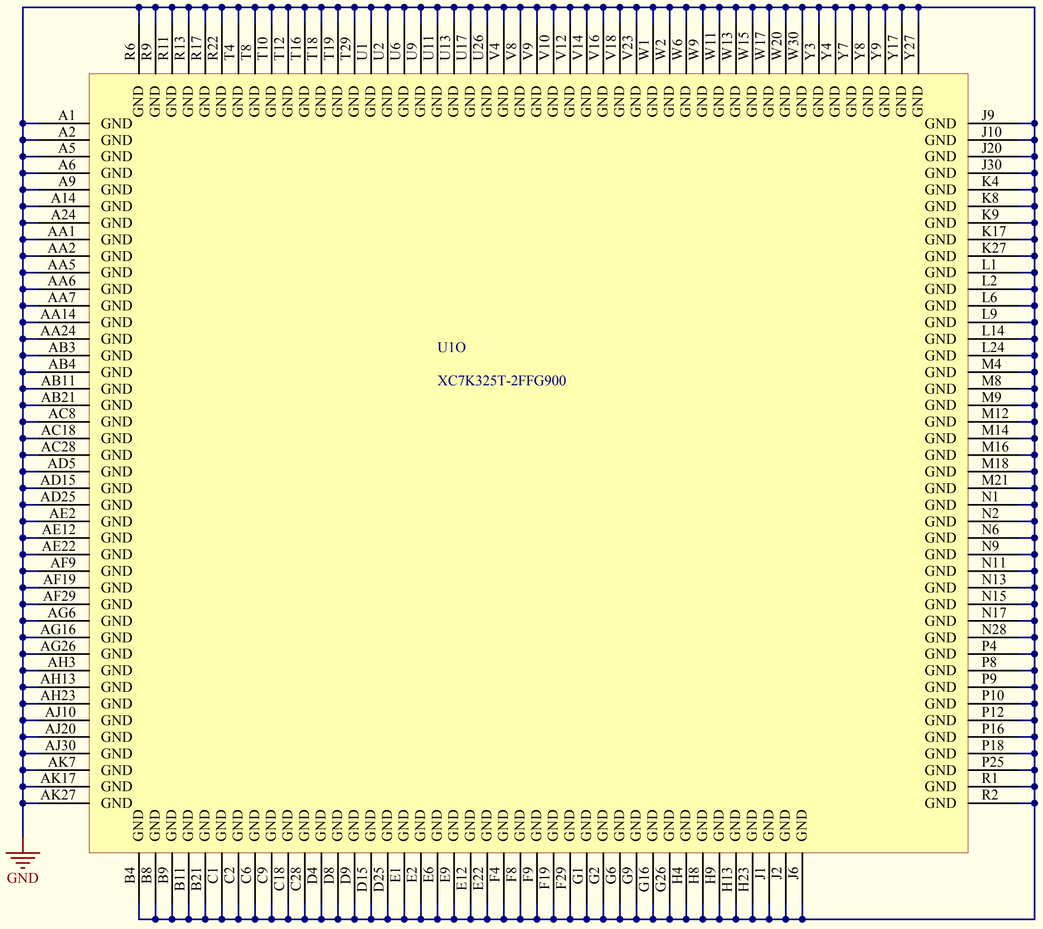

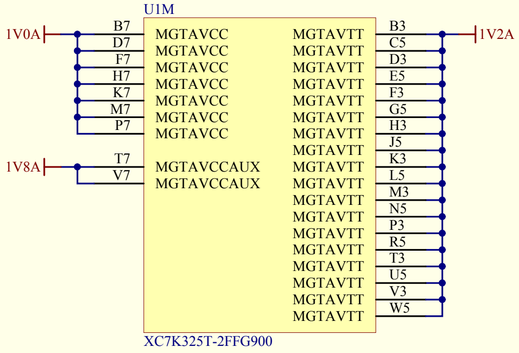

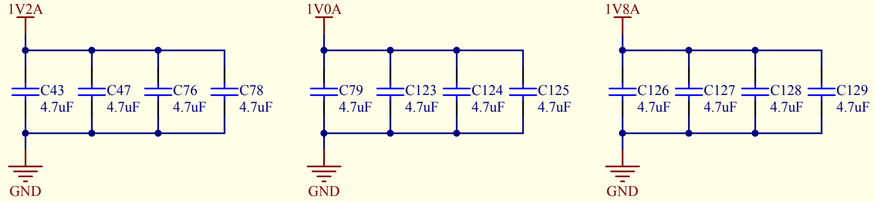

Title	*T1_FPGApower*		*EDF Physics Dept*
Size: A3	Number: 6	Revision: 2.1	*Boston University*
Date: 1/6/2013	Time: 4:49:03 PM	Sheet 6 of 7	
File: D:\projects\AMC13\AMC13XG\T1_FPGApower.SchDoc			

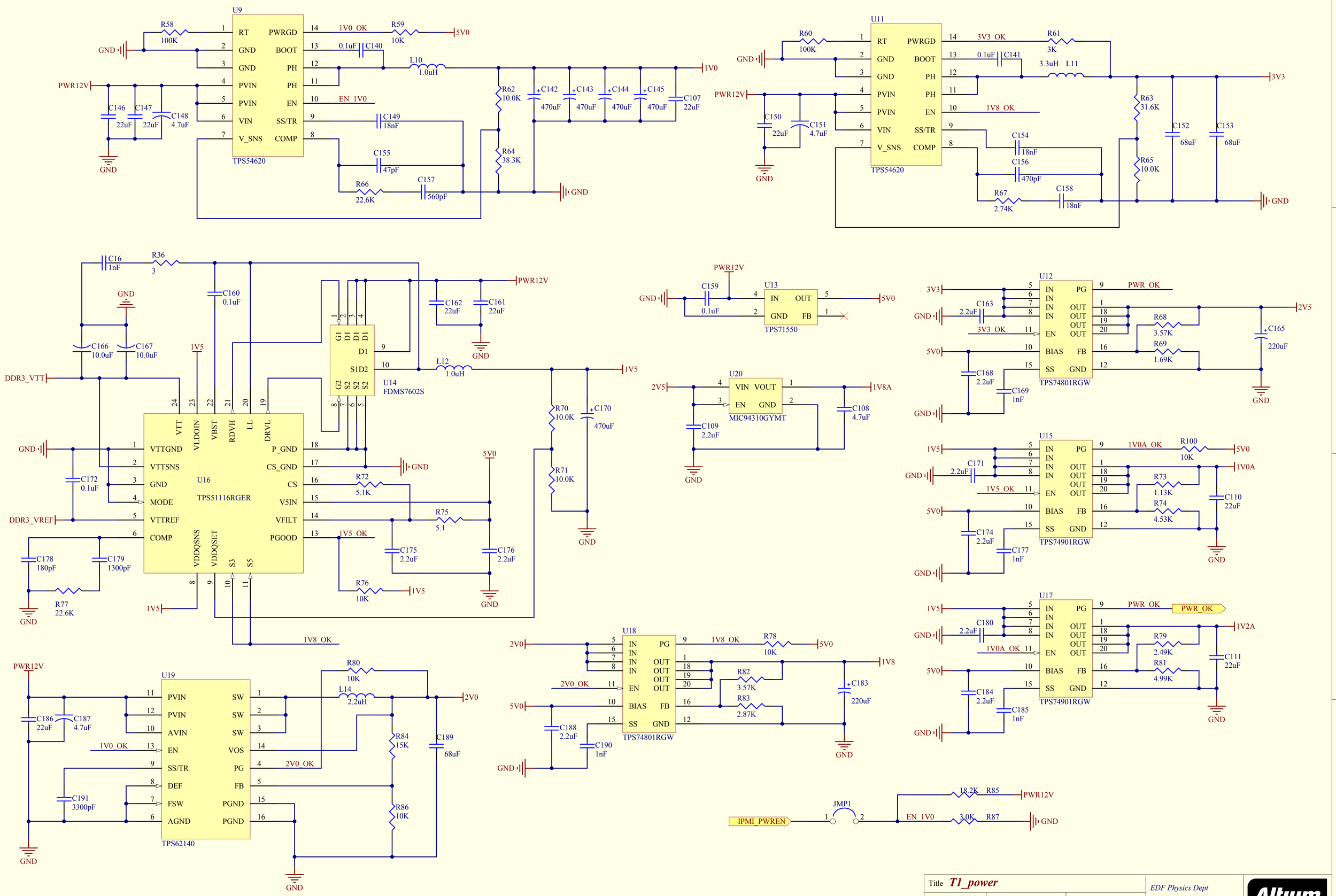

Title	*T1_power*		*EDF Physics Dept*
Size: A3	Number: 7	Revision: 2.1	*Boston University*
Date: 1/6/2013	Time: 4:49:03 PM	Sheet 7 of 7	
File: D:\projects\AMC13\AMC13XG\T1_power.SchDoc			

Altium

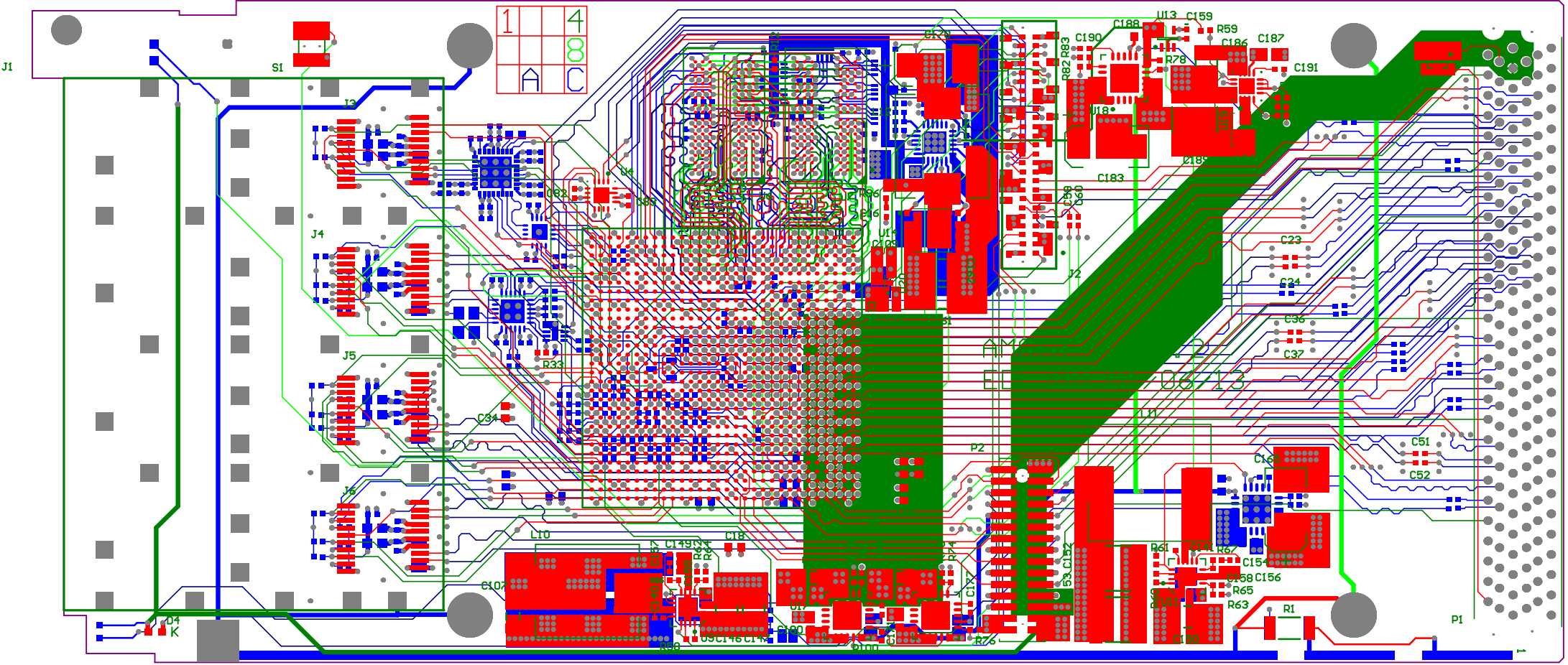

T1XG.PcbDoc
Bot Overlay
1/6/2013 4:49:06 PM

Comment	Description	Designator	Footprint	LibRef	Quantity
SXD_strip		1	SXD	SXD_strip	1
0402CG680J500NT 68pF 5%	Ceramic Chip Capacitor - X5R	C1, C3, C5, C8	CAPC2016L	C1206	4
GRM155R61C104KA88D	Ceramic Chip Capacitor - X7R	C2, C4, C6, C7, C9, C10, C11, C12, C13, C20, C26, C28, C30, C32, C35, C71, C86, C97, C98, C99, C95, C169, C177, C180, C182	CAPC1005L	C0402	19
1nF	Ceramic Chip Capacitor - X7R	C14, C16, C45, C51, C53, C54, C36, C37, C38, C39, C40, C42, C43, C44, C46, C48, C50, C52, C53, C54, C55, C56, C57, C58, C59, C60, C62, C63, C64, C65, C66, C67, C72, C73, C74, C75, C77, C80, C81, C82, C83, C84, C85, C86, C87, C88, C90, C91, C104, C105, C108, C112, C113, C114, C115, C116, C117, C118, C119, C120, C121, C122, C140, C141, C158, C160, C170, C171, C172	CAPC1005L	C0402, C0805	79
C1608X5R1A475M080AB	Ceramic Chip Capacitor - Standard	C18, C25, C27, C34, C41, C47, C76, C78, C79, C106, C123, C124, C125, C126, C127, C128, C129	CAPC1608L	C0603	19
10nF	Ceramic Chip Capacitor - X7R	C87, C88, C89, C92, C93, C103	CAPC1005L	C0402, C0805	6
GRM188R71A104KA35D	Ceramic Chip Capacitor - X7R	C94	CAPC1608L	C0603	1
1.5uF	Ceramic Chip Capacitor - X5R	C102	CAPC1005L	C0402	1
C1210X5R0J226M160AC	Ceramic Chip Capacitor - Standard	C107, C110, C111	CAPC3216L	C0603	3
GRM319BR61A225ME34D	Ceramic Chip Capacitor - Standard	C109, C152, C166, C171, C174, C175, C176, C180, C184, C185, C186	CAPC1608L	C0603	10
MAT-SX6DA7T-E4	SMA(JTC)(EIA-535-BAAC)	C142, C143, C150	TSKSL	POLCAP	3
GRM32ER71E226KE15L	Ceramic Chip Capacitor - Standard	C146, C147, C153, C161, C162, C188	CAPC3225L	C1210	6
TMK212A7475MG-T	CAPACITOR, CERAMIC	C148, C151, C167	CAPC2012L	C	3
16nF	Ceramic Chip Capacitor - X7R	C149, C154, C159	CAPC1005L	C0402	3
C3750X5R1A686M	Ceramic Chip Capacitor - Standard	C152, C163, C189	CAPC3750L	C1210	3
470F	Ceramic Chip Capacitor - NPO	C155	CAPC1005L	C0402	1
470pF	Ceramic Chip Capacitor - NPO	C156	CAPC1005L	C0402	1
680pF	Ceramic Chip Capacitor - X7R	C157	CAPC1005L	C0402	1
EEF-UE0J221LR	SMD(JTC)(EIA-535-BAAC) CAPACITOR	C165, C169	TSKSH	POLCAP	2
TMK212BJ475KG-T	CERAMIC CAPACITOR X5R	C166, C187	CAPC2012L	C	2
0.9L	Ceramic Chip Capacitor - NPO	C178	CAPC1005L	C0402	1
180pF	Ceramic Chip Capacitor - X7R	C179	CAPC1005L	C0402	1
1.8nF	Ceramic Chip Capacitor - X7R	C181	CAPC1005L	C0402	1
1000pF	Ceramic Chip Capacitor - X7R	C191	CAPC1005L	C0402	1
BLUE	LNBG2W6KRA1	D2	LED0805MW	LED2	1
RED	LTST-C194KRKT	D4	LED_led	LED2	1
GREEN	LTST-C070GKT	D5	LED0805SW	LED2	1
MA734W	SCHOTTKY DIODE	D12	SOT323	MA734W	1
QTF-A40-M-2081	SFP+/xfp cage	J1	SFP+/xfi	QUAD SFP+	1
SRM-144682	MICROSPEED Female	J2	MicroSpeed50F	MICROSPEED-F	1
QSFP-A2D-0000T	SFP+ connector	J3, J4, J5, J6	SFP+	Header20	4
AMP2		JMP1	JMP38	JMP2	1
SK1608HH600-T	INDUCTOR, MUAC	L1, L2, L3, L4, L5, L6, L7, L12	1608[0603]	INDUCTOR	8
SK1005HH600-T	INDUCTOR, MUAC	L8, L9	INDC1005L	INDUCTOR	2
1NL1R8K0J2A1H10	FUNKNOWN INDUCTOR	L10, L12	IHLP4040	INDUCTOR	2
1nH7T44033	FUNKNOWN INDUCTOR	L11	IHLP5050	INDUCTOR	1
1NL1F1K2J2A1H20	FUNKNOWN INDUCTOR	L14	IHLP1212	INDUCTOR	1
1623 170 1301 000	DTUK plug connector	P1	AMC_plug_B	UTCA_CONN	1
FTS-115-G-L-D-K	Header, TWIN, Dual-row	P2	FTS115	HEADER2X15	1
0402WGF1000 100Ω	FILM RESISTOR	R1, R2	RESC1005L	R1	2
0402	FILM RESISTOR	R3, R18	RESC1005L	R1	2
RR0510P-101-D	FILM RESISTOR 0402	R4	RESC1005L	R1	1
33	FILM RESISTOR 0402	R5, R6, R88, R89	RESC1005L	R1	4
ERJ-2RKF4992X	FILM RESISTOR 0402	R6, R7	RESC1005L	R1	2
RR0510P-241-D	FILM RESISTOR	R13, R14, R14, R14, R15, R16	RAA4X	RN4	5
TC124-JR-07390RL	FILM RESISTOR	R14, R15	RESC1005L	R1	2
ERJ-2RKF3092X	FILM RESISTOR 0402	R11, R12, R61	RESC1005L	R1	3
3K	FILM RESISTOR 0402	R18	RESC1005L	R1	1
33	FILM RESISTOR 0402	R20, R21, R22, R23, R24, R25, R26, R101, R102, R103, R104, R105, R106, R107, R108, R109, R110	RESC1005L	R1	11
8.8K	FILM RESISTOR 0402	R27, R28, R29, R30, R31, R32, R76, R78, R80, R100	RESC1005L	R1	10
10K	FILM RESISTOR 0402	R122	RESC1005L	R1	1
RR0510P-472-D	FILM RESISTOR	R34	RESC1005L	R1	1
RR0510P-302D	FILM RESISTOR 0402	R36	RESC1005L	R1	1
1	FILM RESISTOR 0402	R37	RESC1005L	R1	1
1.7K	FILM RESISTOR	R38	RESC1005L	R1	1
RR0510P-302-D	FILM RESISTOR 0402	R39, R40, R41, R42, R55, R60, R63, R70, R71, R98, R91, R97, R98	RESC1005L	R1	13
RR0510P-103-D	FILM RESISTOR 0402	R44	RESC1005L	R1	1
2.4K	FILM RESISTOR 0402	R45	RESC1005L	R1	1
RR0510P-2032-D	FILM RESISTOR 0402	R47	RESC1005L	R1	1
7.5K	FILM RESISTOR 0402	R48	RESC1005L	R1	1
RR0510P-822-D	FILM RESISTOR 0402	R50, R51, R54, R56, R66	RESC1005L	R1	2
1.8K	FILM RESISTOR 0402	R51	RESC1005L	R1	1
RR0510P-182-D	FILM RESISTOR 0402	R53	RESC1005L	R1	1
910	FILM RESISTOR 0402	R54	RESC1005L	R1	1
RR0510P-1132-D	FILM RESISTOR 0402	R57, R72, R99	RESC1005L	R1	3
1.1K	FILM RESISTOR 0402	R57	RESC1005L	R1	1
1K	FILM RESISTOR 0402	R58, R60	RESC1005L	R1	2
RR0510P-104-D	FILM RESISTOR 0402	R63	RESC1005L	R1	1
ERJ-2RKF2162X	FILM RESISTOR 0402	R64	RESC1005L	R1	1
ERJ-2RKF3632X	FILM RESISTOR 0402	R66, R77	RESC1005L	R1	2
ERJ-2RKF2262X	FILM RESISTOR 0402	R67	RESC1005L	R1	1
ERJ-2RKF2741X	FILM RESISTOR 0402	R68, R82	RESC1005L	R1	2
ERJ-2RKF3671X	FILM RESISTOR 0402	R69	RESC1005L	R1	1
ERJ-2RKF1691X	FILM RESISTOR 0402	R73	RESC1005L	R1	1
ERJ-2RKF1131X	FILM RESISTOR 0402	R74	RESC1005L	R1	1
RR0510P-4521-D	FILM RESISTOR 0402	R75	RESC1005L	R1	1
5.1	FILM RESISTOR 0402	R79	RESC1005L	R1	1
RR0510P-3491-D	FILM RESISTOR 0402	R81	RESC1005L	R1	1
RR0510P-469-D	FILM RESISTOR 0402	R83	RESC1005L	R1	1
ERJ-2RKF2871X	FILM RESISTOR 0402	R84	RESC1005L	R1	1
RR0510P-153-D	FILM RESISTOR 0402	R85	RESC1005L	R1	1
ERJ-2RKF1802X	FILM RESISTOR 0402	R87	RESC1005L	R1	1
ERJ-2RKF3001X	FILM RESISTOR 0402	R90	RESC1005L	R1	1
RR0510P-163-D	FILM RESISTOR	R92	RESC1005L	R1	1
8.2K	FILM RESISTOR 0402				
HDT0001	Microswitch for UTCA	S1	HDT0001	HDT0001	1
RCP82001		S1	RCP82001	RCP82001	1
SRT2400		S1	SRA800	SRT2400	1
4294014	24th Vorh Analog Device	U2	DP-SO-2	4294014	1
SY89833U	Micrel	U3	MLF16	SY89833U	1
SY89875U	Micrel	U4	MLF16	SY89875U	1
0433389	Silicon Lab	U5	QFN24	0433389	1
M14L256W6621-10F	Micron DDR2 Memory	U6, U7	FBGA68	MT41J64M16LA	2
AD81581ART	1-Ch Microprocessor Precision Shunt Voltage Reference	U9	ST-2_N	AD1581ART	1
TPS54620	1-channel buck power regulator	U9, U11	0-PVQFN-N14	TPS54620	2
SY89835U	Micrel	U10	MLF8	SY89835U	1
TPS74601RGW	1-Ch LDO power regulator	U12, U16	0-PVQFN-N20	TPS74601	2
TPS71550	1-Ch LDO power regulator	U13	SOT0-6	TPS71501	1
ICS557G025		U14	POWVFN56	ICS557G025	1
TPS74601RGW	1-Ch LDO power regulator	U15, U17	0-PVQFN-N20	TPS74601	2
TPS211165QDR		U18	0-PVQFN-N24	TPS211165QDR	1
TPS62140		U19	0-PVQFN-N16	TPS62140	1
MIC94310YMT	1-Ch LDO power regulator	U20	MLF16100-4L	MIC94310YMT	1
AB4000-25.000MHz			TXGuard	XO-3025	1