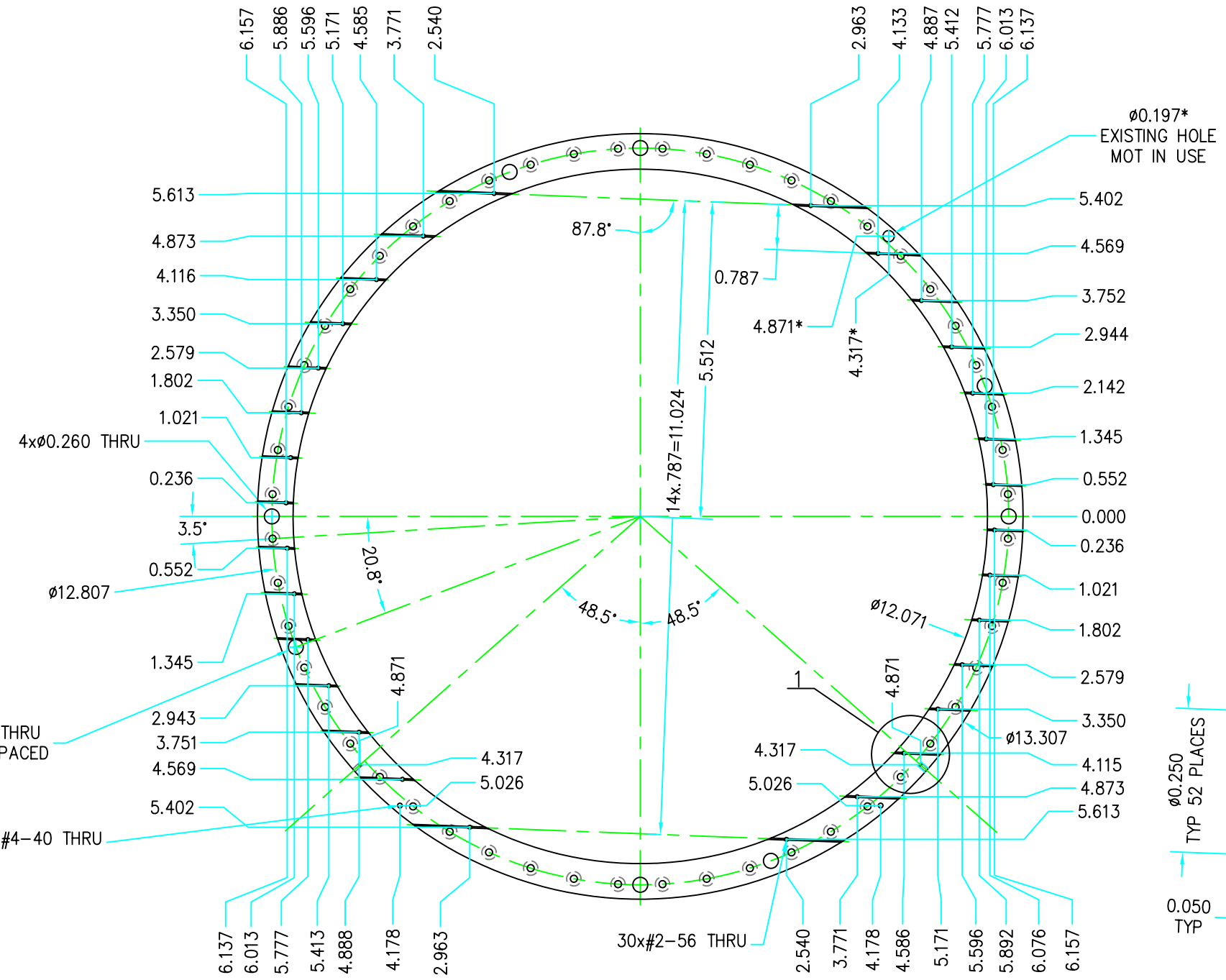


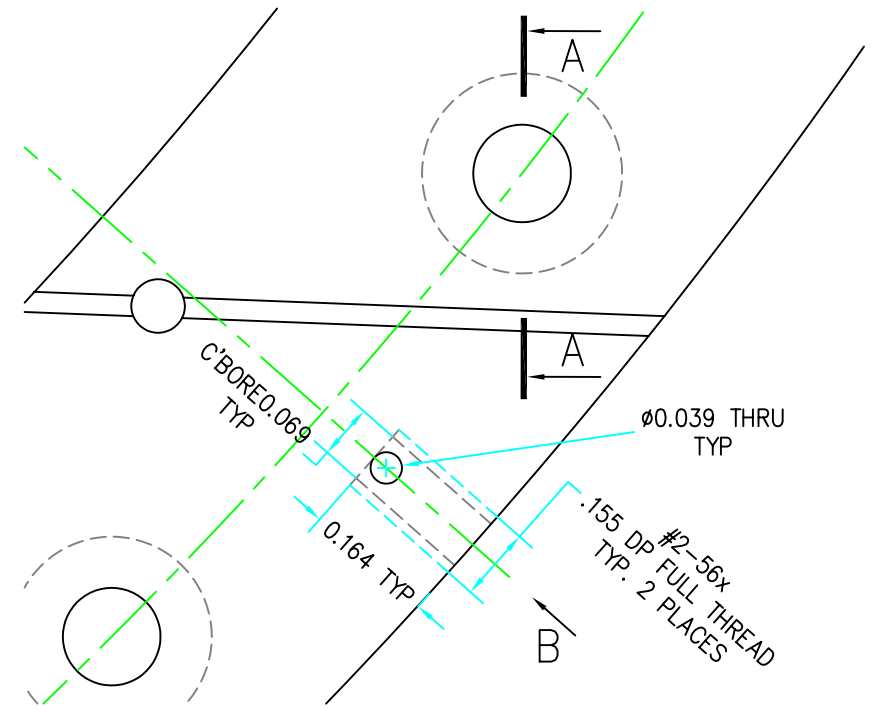


REF 1
M 10:1

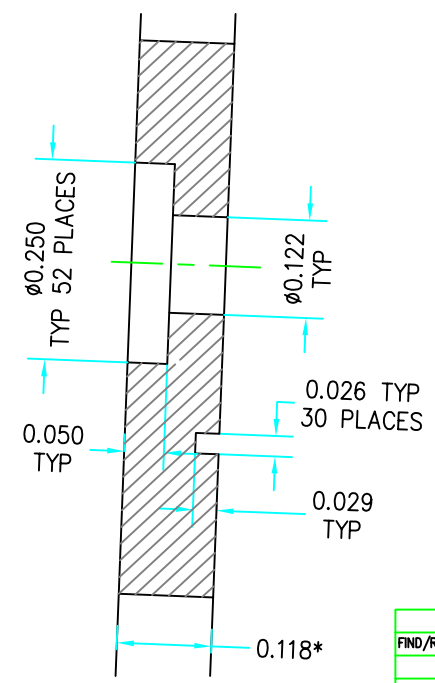


SECTION A–A
M 10:1

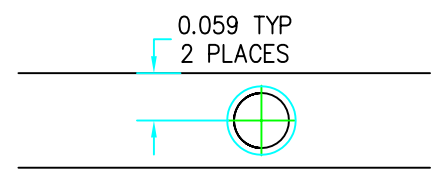


VIEW B
M 10:1

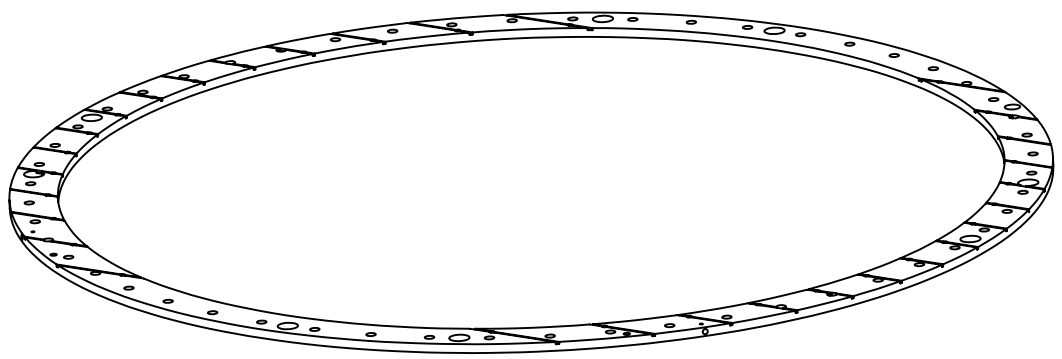

* REFERENCE ONLY
NO LUBRICANT ALLOWED WHILE MACHINING

| FIND/REF.# | QTY. | U.M. | PART NAME | MATERIAL | PART DESCRIPTION | REF. SHEET/DWG. |
|---|---|---|---|---|---|---|
| | | | RING | COPPER | | |

PARTS LIST

UNLESS OTHERWISE SPECIFIED:

1. DIMENSIONS ARE IN MM.
2. MACHINE SURFACES TO BE FLAT, SQUARE, PARALLEL & CONCENTRIC WITHIN .020 FOR 100 MM OR .020 TIR AS APPLICABLE.
3. MARK ALL DETAILS ( EXEMPT COMMERCIAL PARTS ) WITH DWG. & ITEM NUMBER.
4. BREAK ALL SHARP CORNERS .15 x 45° CHAMFER.
5. FILLETS SHOWN SHARP = 1.0 RAD.
6. TAPPED HOLES: MIN DEPTH 2.0 x DIA.,
7. C'SINK BORED & REAMED HOLES 1.5 x 45°.
8. CENTERS PERMISSIBLE.
9. DO NOT SCALE DRAWING.
10. ALL WELDING TO CONFORM TO LATEST A.W.S. STANDARDS.

PERMISSIBLE VARIATION IN MM DIMENSIONS WITHOUT TOLERANCES

| | | | | | | | | |
|---|---|---|---|---|---|---|---|---|
| DIMEN | < 3 | 3–6 | 6–10 | 10–18 | 18–30 | 30–50 | 50–80 | 80–120 |
| TOLER | ±0.05 | ±0.06 | ±0.075 | ±0.09 | ±0.105 | ±0.125 | ±0.150 | ±0.175 |
| DIMEN | 120–180 | 180–250 | 250–315 | 315–400 | 400–500 | 500–630 | 630–800 | over 800 |
| TOLER | ±0.200 | ±0.230 | ±0.260 | ±0.285 | ±0.315 | ±0.350 | ±0.400 | ±0.500 |
| ANGLE | ±1° | ±30' | ±20' | ±10' | ±5' | VALUES ACCORDING SHORT SIDE | | |

SURFACE TEXTURE Ra12.5

TOLERANCES ARE NOT ACCUMULATIVE

| NEXT ASSY | QTY | DRAWING INFORMATION | NAME | DATE |
|---|---|---|---|---|
| | | DRAWN | Andrey | 10.02.09 |
| | | CHECKED | | |
| | | APPROVED | HW | |

HIGH ENERGY PHYSICS LABORATORY

CYLON
BRANDEIS

TITLE CYLON GRID CLAMP RING

SIZE D | SCALE 1:4

PROJECT NUMBER 100

DRAWING NUMBER

SHEET 1 OF 1 | REVISION A

| ZONE | REV | DESCRIPTION | DATE | APPROVED |
|---|---|---|---|---|
| | | | | |