REVISIONS				
ZONE	REV	DESCRIPTION	DATE	APPROVED

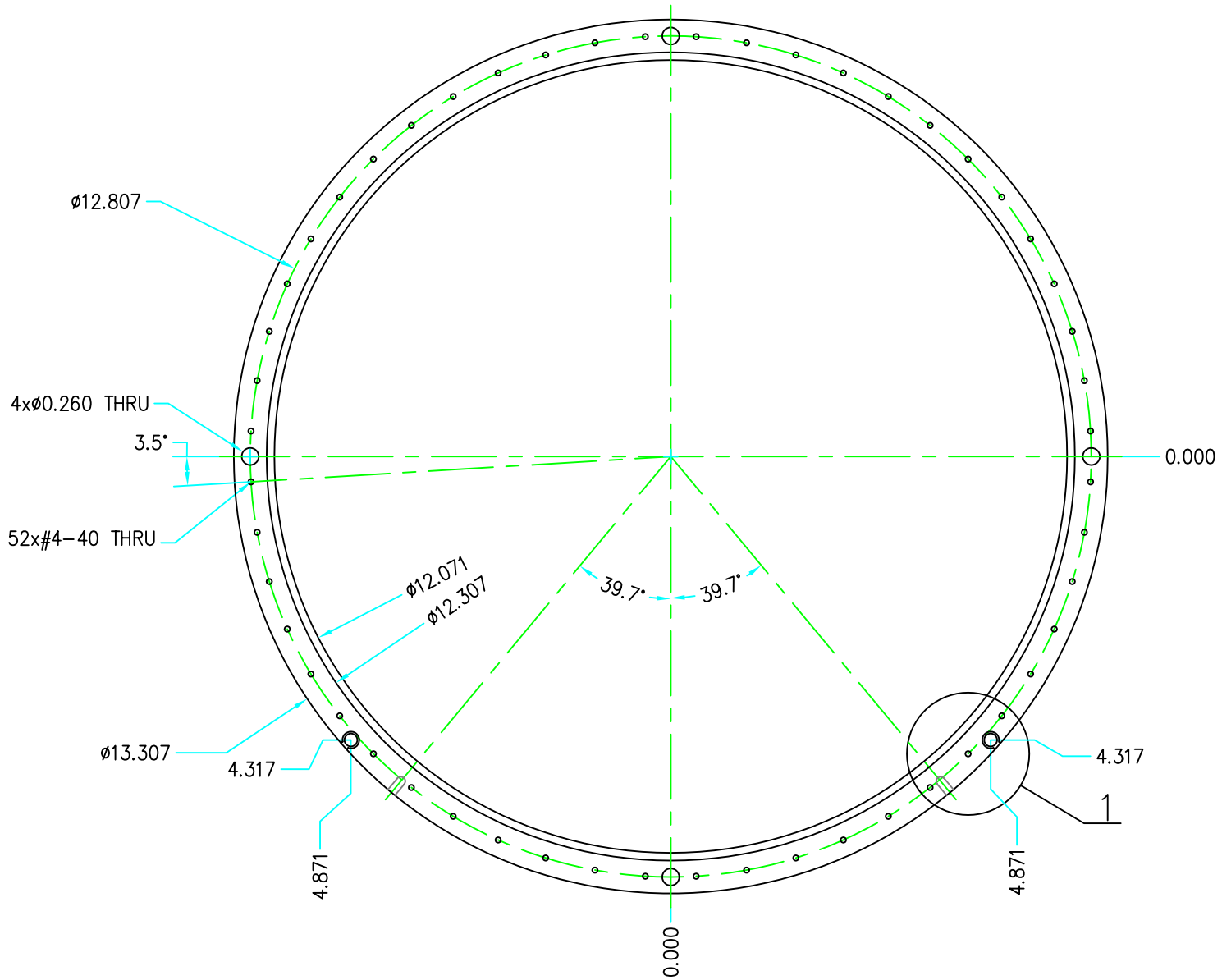

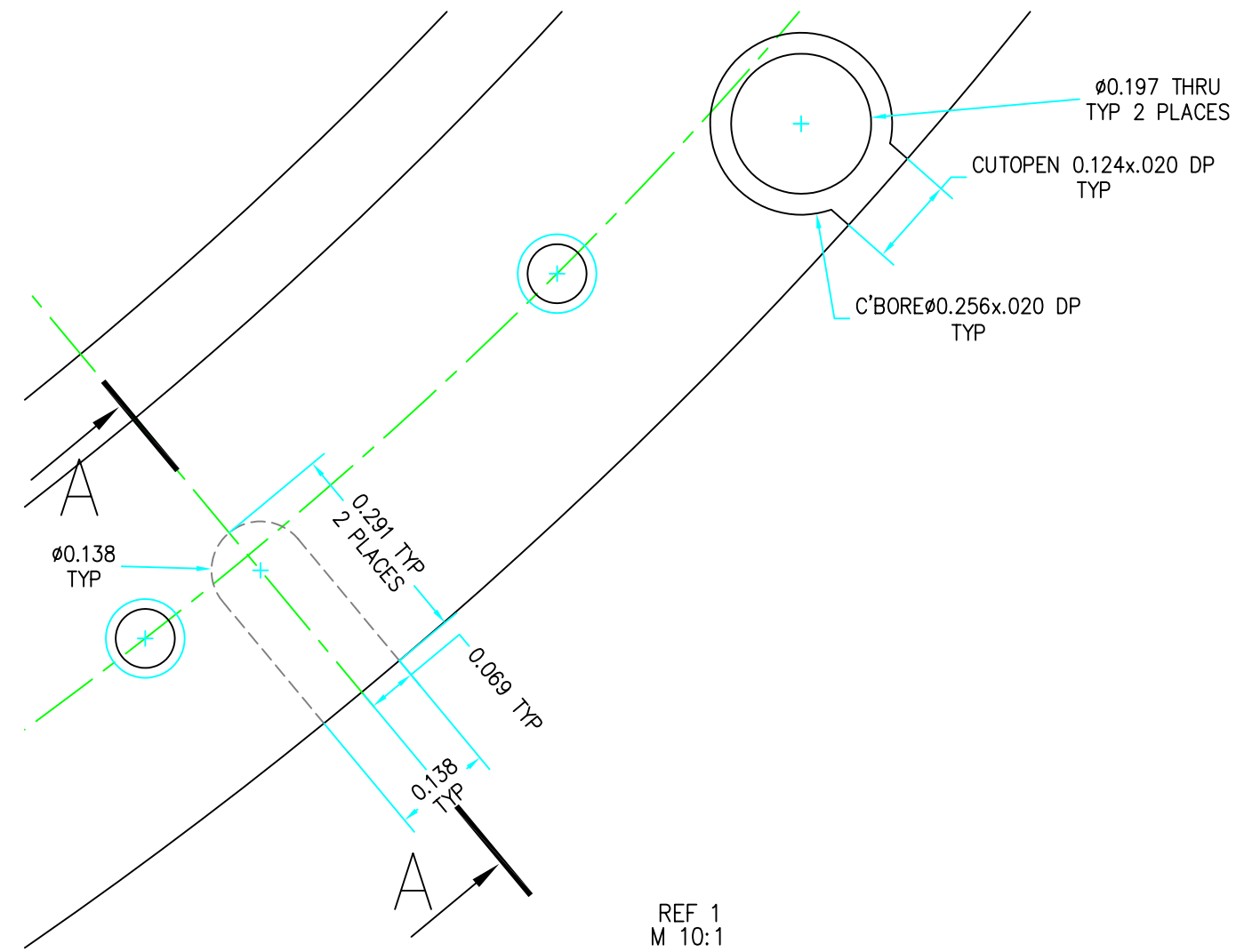

REF 1
M 10:1

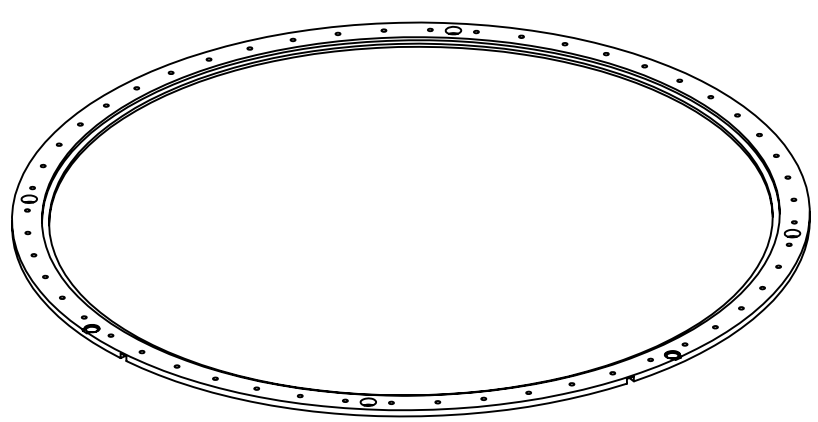

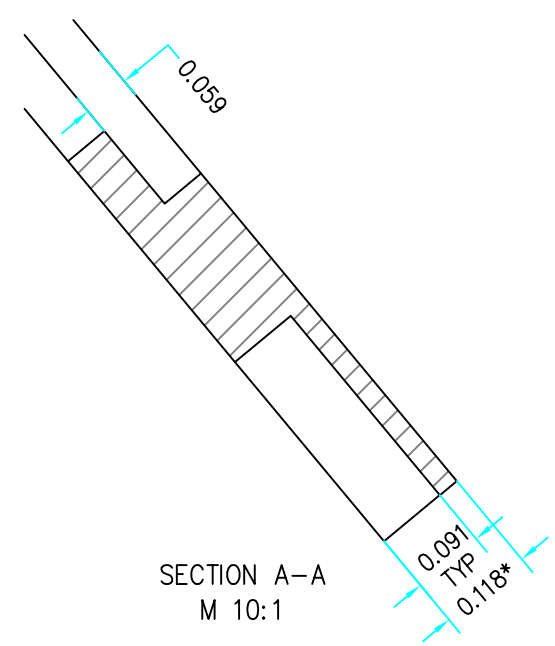

SECTION A–A
M 10:1

* REFERENCE ONLY
NO LUBRICANT ALLOWED WHILE MACHINING

FIND/REF.#	QTY.	U.M.	PART NAME	MATERIAL	PART DESCRIPTION	REF. SHEET/DWG.
			RING	COPPER		

PARTS LIST

UNLESS OTHERWISE SPECIFIED:

1. DIMENSIONS ARE IN MM.
2. MACHINE SURFACES TO BE FLAT, SQUARE, PARALLEL & CONCENTRIC WITHIN .020 FOR 100 MM OR .020 TIR AS APPLICABLE.
3. MARK ALL DETAILS (EXEMPT COMMERCIAL PARTS) WITH DWG. & ITEM NUMBER.
4. BREAK ALL SHARP CORNERS .15 x 45° CHAMFER.
5. FILLETS SHOWN SHARP = 1.0 RAD.
6. TAPPED HOLES: MIN DEPTH 2.0 x DIA.,
7. C'SINK BORED & REAMED HOLES 1.5 x 45°.
8. CENTERS PERMISSIBLE.
9. DO NOT SCALE DRAWING.
10. ALL WELDING TO CONFORM TO LATEST A.W.S. STANDARDS.

PERMISSIBLE VARIATION IN MM DIMENSIONS WITHOUT TOLERANCES

DIMEN	< 3	3–6	6–10	10–18	18–30	30–50	50–80	80–120
TOLER	±0.05	±0.06	±0.075	±0.09	±0.105	±0.125	±0.150	±0.175
DIMEN	120–180	180–250	250–315	315–400	400–500	500–630	630–800	over 800
TOLER	±0.200	±0.230	±0.260	±0.285	±0.315	±0.350	±0.400	±0.500
ANGLE	±1°	±30'	±20'	±10'	±5'	VALUES ACCORDING SHORT SIDE		

SURFACE TEXTURE Rz12.5

TOLERANCES ARE NOT ACCUMULATIVE

NEXT ASSY	QTY	DRAWING INFORMATION	NAME	DATE
		DRAWN	Andrey	10.02.09
		CHECKED		
		APPROVED	HW	

HIGH ENERGY PHYSICS LABORATORY

CYLON BRANDEIS

TITLE CYLON CATHODE MESH RING

SIZE	SCALE
D	1:4

PROJECT NUMBER: 100

DRAWING NUMBER:

SHEET	REVISION
1 OF 1	A